对于孔的工艺的额外标注，其余参数请参考STEP模型

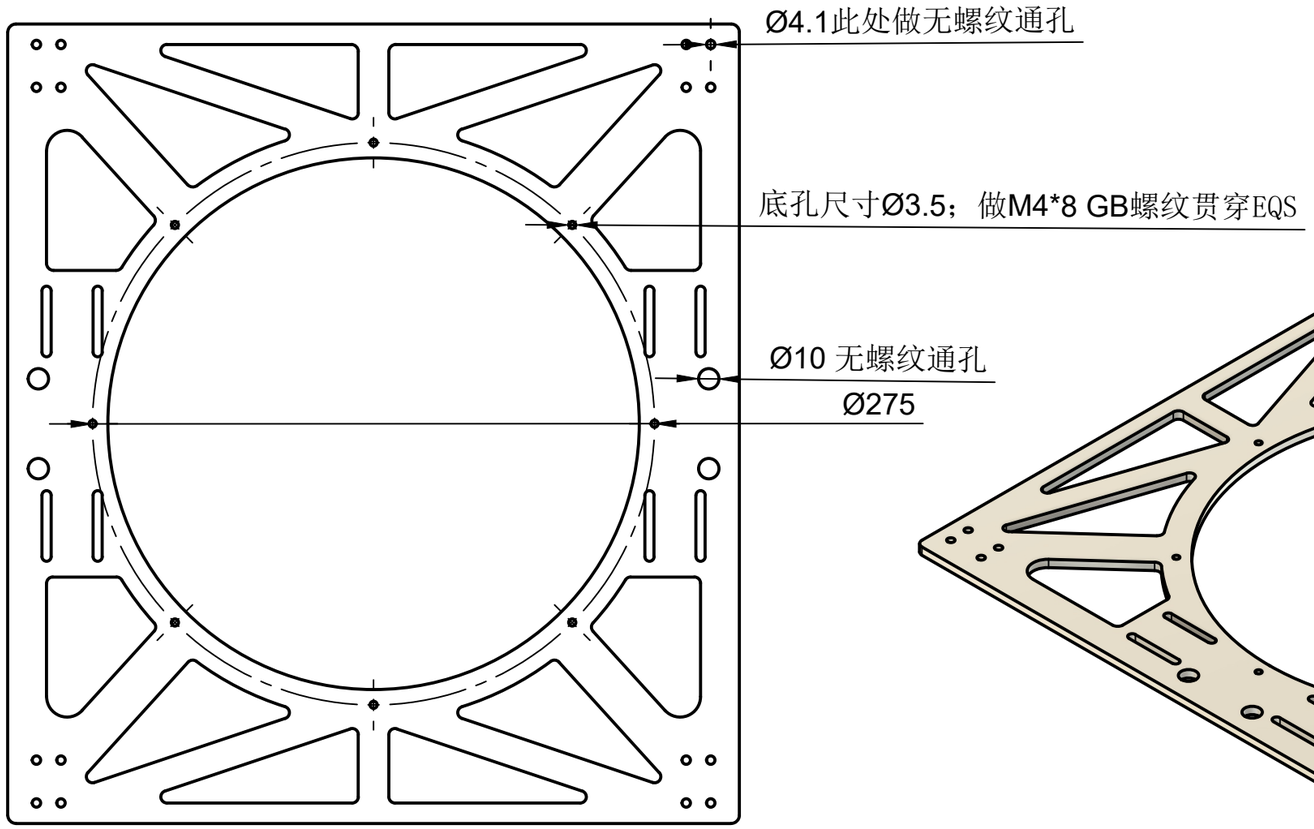

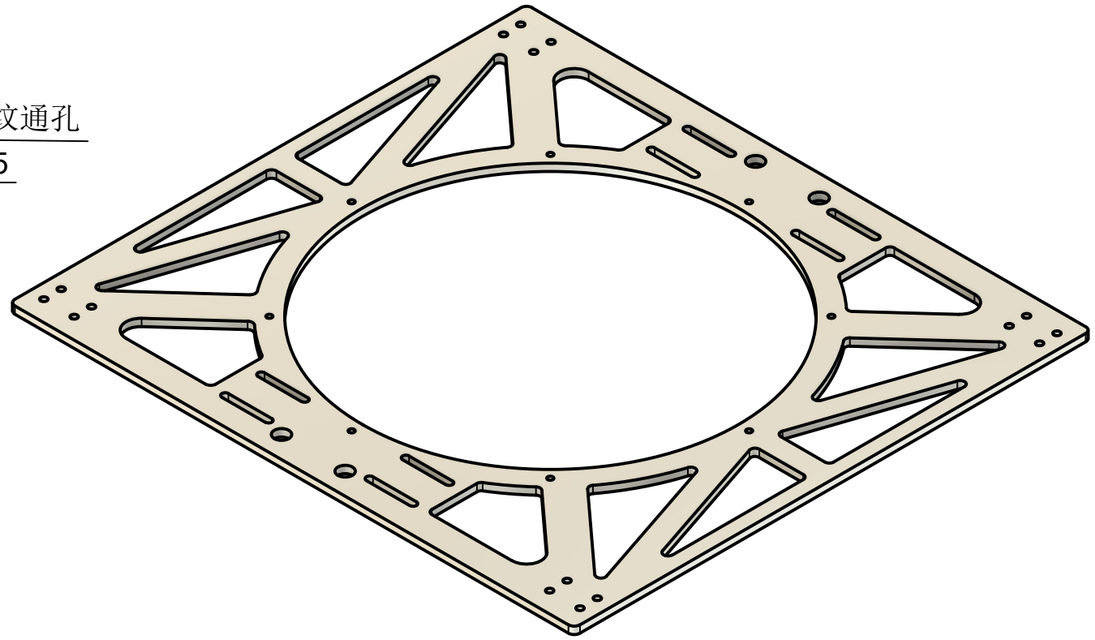

Dept.	Technical reference	Created by 礼珂 蔡 8/5/2025	Approved by
		Document type	Document status
		Title 金属-支撑板-重置	DWG No.
			Rev. / Date of issue / Sheet 1/1